Incra® The Versatile Stop Positioner

SHOP STOP

From the makers of INCRA JIG

OWNER'S MANUAL

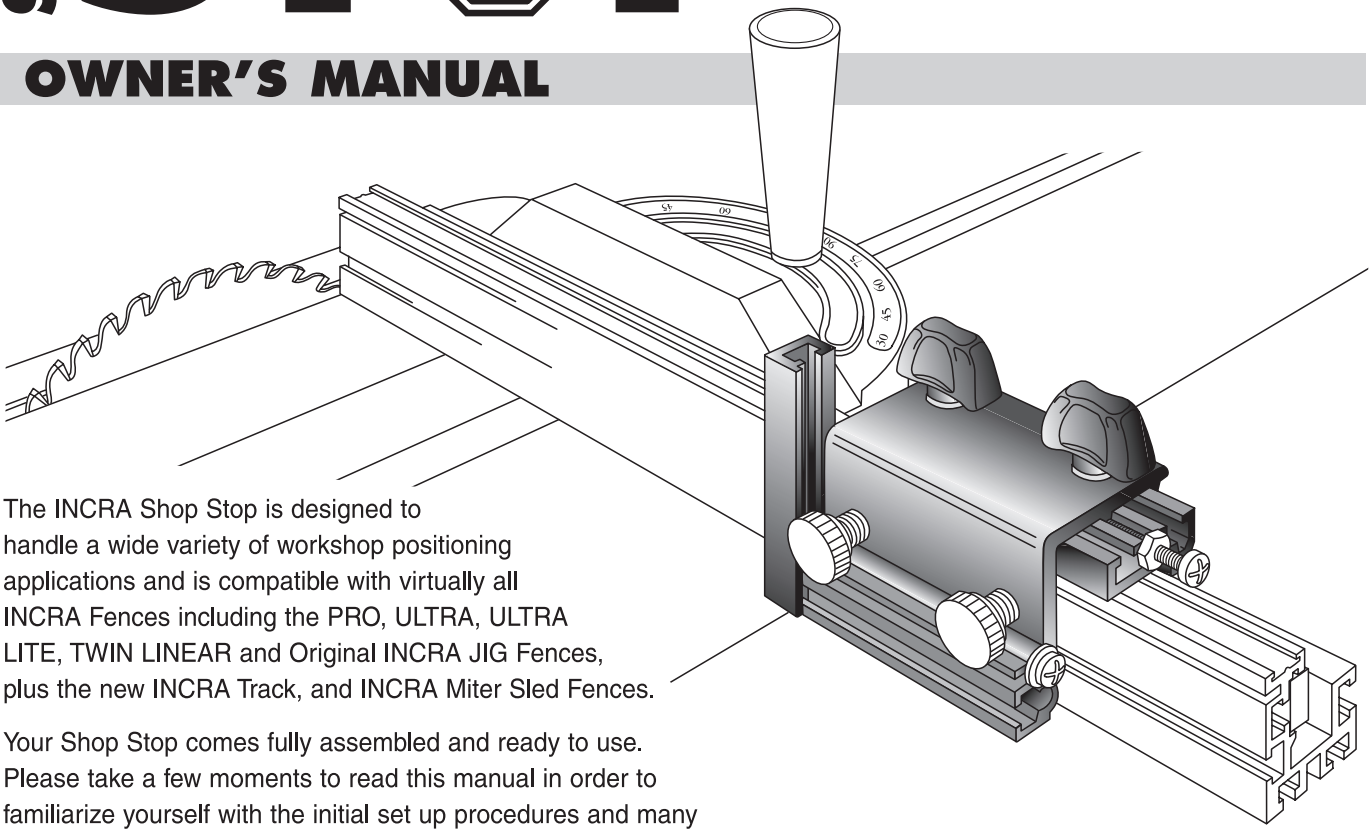

The INCRA Shop Stop is designed to handle a wide variety of workshop positioning applications and is compatible with virtually all INCRA Fences including the PRO, ULTRA, ULTRA LITE, TWIN LINEAR and Original INCRA JIG Fences, plus the new INCRA Track, and INCRA Miter Sled Fences.

Your Shop Stop comes fully assembled and ready to use. Please take a few moments to read this manual in order to familiarize yourself with the initial set up procedures and many features. You'll soon be ready to use the most accurate and versatile stop positioner available today.

SAFETY

Important safety instructions for using the INCRA Shop Stop

- ❑ Before using the INCRA Shop Stop, read and follow all of the instructions and safety information in this manual.
- ❑ When using the INCRA Shop Stop in conjunction with any other tool, first read and follow all safety information in that tool's owner's manual.
- ❑ Never let any part of the INCRA Shop Stop interfere with another tool's safety guards or other safety equipment.
- ❑ Never let the bit or blade come into contact with the metal body of the INCRA Shop Stop.
- ❑ Always turn off the power and make sure that the bit or blade is fully stationary before changing the setting of any part of the INCRA Shop Stop.
- ❑ Wear safety glasses, hearing protection and follow all normal shop safety practices.
- ❑ When using the INCRA Shop Stop to position a piece for a cut, always hold or otherwise clamp the board between the INCRA Shop Stop and the blade.

CONTENTS

Features 2

Adjustments
- Vertical Stop Arm 2
- Horizontal Stop Rod 2
- Micro adjusting 3
- Converting from Standard to Expanded Clamping Mode . . . 3
- Reversing your Shop Stop . . . 4
- Customizing your Shop Stop . . 4

Operation
- Calibration 5
- Zeroing at the Router Table . . 5
- Zeroing at the Drill Press . . . 6
- Zeroing at Crosscut Stations . . 7

Parts & Warranty 8

FEATURES

The INCRA Shop Stop comes equipped with two interchangeable and reversible stop surfaces – a vertical stop arm which can be adjusted up or down to accommodate different fence heights, and a horizontal stop rod which can be useful in extending the stop surface forward beyond the actual body of the stop. Further, by removing the stop rod and stop arm, user-made wooden stop pieces can be screwed into the T-slot to provide the perfect stop surface for even the most unusual wood profiles. The two-piece expandable Shop Stop body design allows you to add 3/4" thick wooden sub-fences to your INCRA fence for zero clearance applications without compromising the use of the stop. The patented incremental positioning of INCRA's sawtoothed racks allows perfectly repeatable stop locations at any multiple of 1/32", while the micro adjust screw permits easy fine adjustments anywhere between the 1/32" tooth spacing. (See Fig. 1)

FIG. 1
Shop Stop features

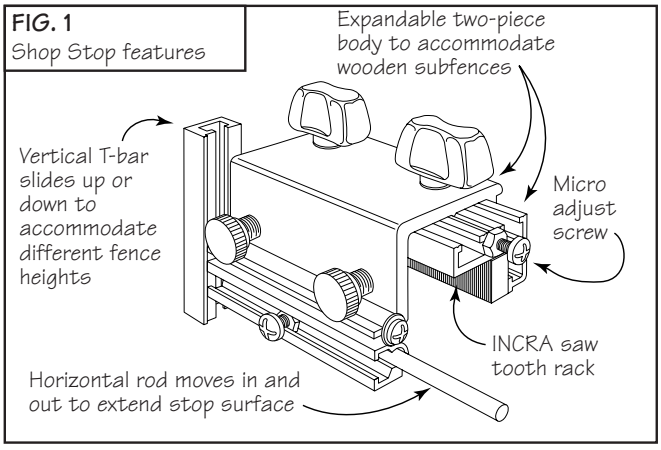

ADJUSTMENTS

FIG. 2
Adjusting vertical stop arm

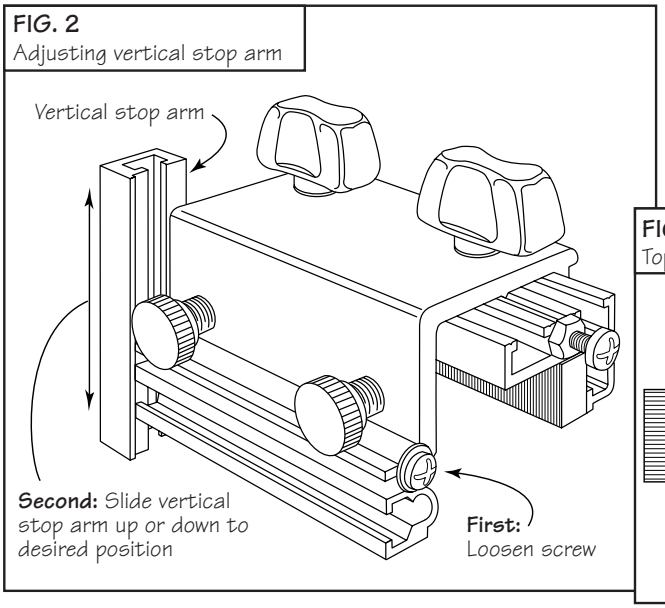

Vertical Stop Arm:

To adjust the vertical stop arm up or down, loosen the machine screw as shown in Fig. 2 and slide the stop arm to the desired position. As you tighten the screw, make sure the indexing lip on the stop arm is pressed against the face of the stop body. (Fig. 3)

FIG. 3
Top view of stop arm position

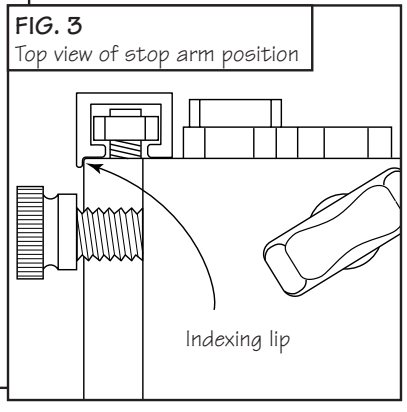

TIP

When adjusting the vertical stop arm, leave a small gap between the end of the stop arm and the router table, drill press or table saw top. This provides clearance for sawdust.

FIG. 4
Adjusting horizontal stop rod

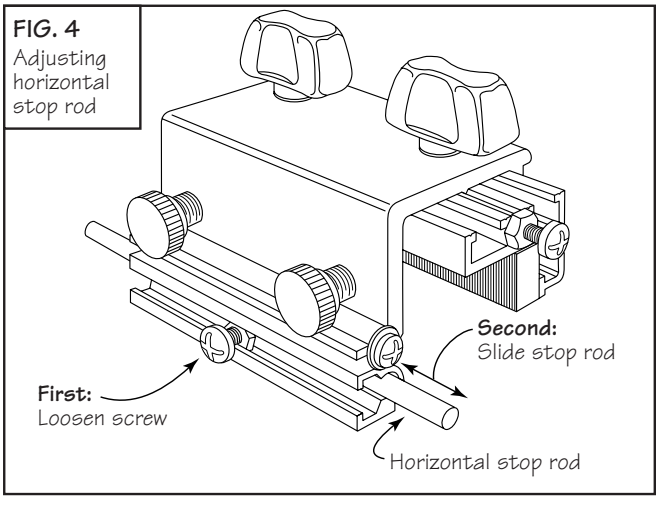

Horizontal Stop Rod:

The horizontal stop rod is held in place by a #10-32 x 3/8" machine screw. To adjust the position of the stop rod, loosen the screw and slide the rod as necessary, then retighten the screw (Fig. 4)

CAUTION: Always unplug the motor before zeroing your Shop Stop to any power tool.

Micro adjusting:

Fine-tuning the position of your Shop Stop relative to a cutter is easy and accurate. Just loosen the two black thumbscrews on top of the Shop Stop body about 1/8 turn, then turn the machine screw located at the end of the Shop Stop (Fig. 5). Each full turn of the screw moves the stop exactly 1/32". Turning the screw clockwise moves the stop surface closer to the cutter. To move the stop surface away from the cutter, turn the screw counterclockwise as you push the stop body toward the screw. Always tighten the two black thumbscrews after micro adjusting.

Converting from standard to expanded clamping mode:

Your INCRA Shop Stop comes assembled in the standard clamping mode. This setup will clamp to virtually any of the INCRA Fences including the ULTRA, ULTRA LITE, TWIN LINEAR and Original INCRA JIG Fences plus the New INCRA Miter Sled and the INCRA Track. In the standard mode you can even clamp the Shop Stop directly to any piece of 3/4" plywood or hardwood. You'll find this feature perfect for those occasions when you want to extend the length or height of your INCRA fence with a 3/4" subfence. A second "expanded" clamping mode allows the use of your Shop Stop after attaching a wooden auxiliary fence to your INCRA Fence. (Fig 6).

Adding a wooden auxiliary fence to your INCRA Miter Sled, chop saw, or INCRA JIG Fence can be very beneficial in that it provides zero clearance between the cutter and the fence. A zero clearance auxiliary fence often translates to safer and cleaner cuts since the smaller opening provides more support for the workpiece at the cut.

The two piece design of the INCRA Shop Stop permits use of a 3/4" thick wooden auxiliary fence without interfering with the stop's ability to clamp to your INCRA Fence. To change the stop to expanded mode, loosen the two black thumbscrews and slide the stop body (red) off of the stop cap (gold). Now slide the two rectangular nuts on the stop body into the alternate T-slot on the cap. (See Fig. 7) Tighten the two clamping knobs.

Attach the auxiliary fence as described in your INCRA Fence owner's manual.

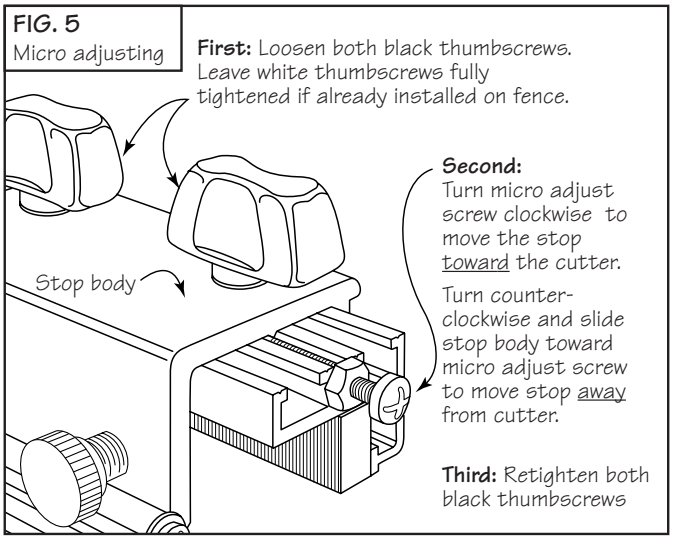

FIG. 5 Micro adjusting

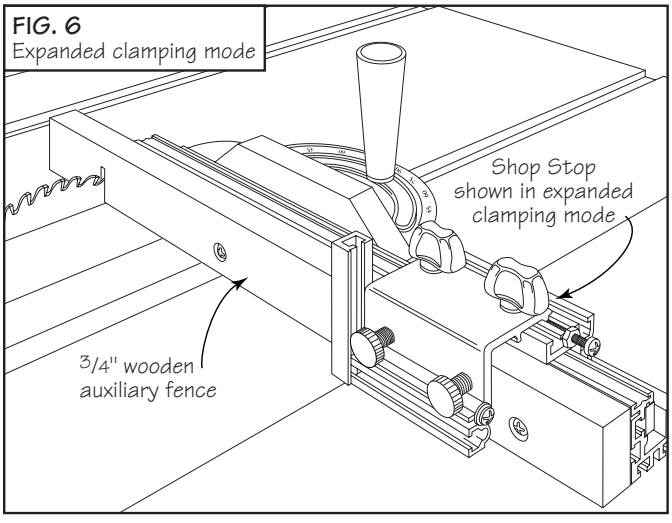

FIG. 6 Expanded clamping mode

Note: *For auxiliary fence applications where incremental use of the Shop Stop is required, use 3/4" hardwood or plywood and make sure that the auxiliary fence is no taller than your INCRA Fence.*

FIG. 7 Converting from standard to expanded clamping mode

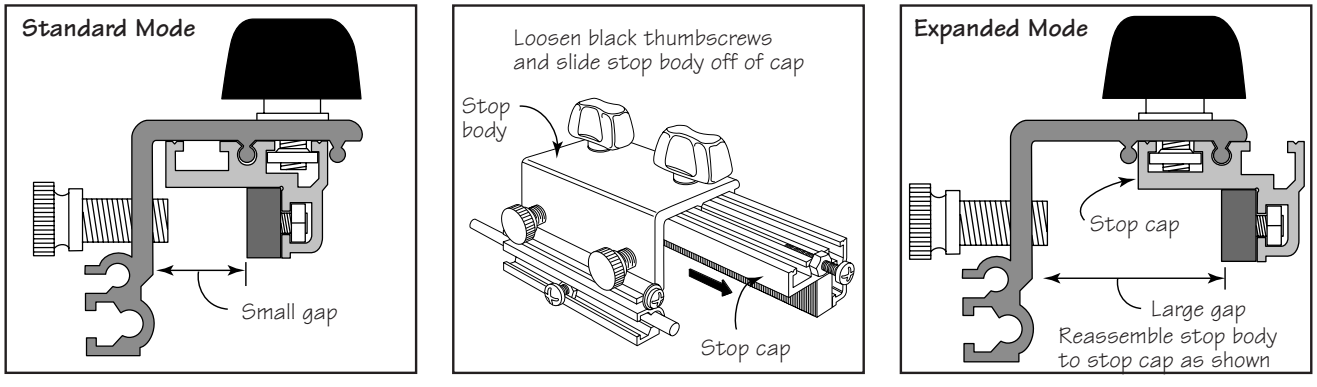

Reversing your Shop Stop:

At some cutting stations it may be desirable to reverse the stop surfaces of the INCRA Shop Stop. This allows the Shop Stop to function as either an infeed or outfeed stop at the router table, or on either side of the blade at a chop saw or radial arm saw.

To reverse your Shop Stop, first move the micro adjust screw to the opposite end of the gold stop cap and tighten the nylon nut against the aluminum. Remove and reverse the #10-32 x 3-½" machine screw that holds the vertical stop arm to the red stop body. Replace the stop arm on the opposite end of the stop body. Make sure the indexing lip on the arm wraps around the front of the stop body (Fig. 3) and that the arm is flat against the end of the body. Tighten the machine screw. (Fig. 8)

FIG. 8
Reversing the Shop Stop

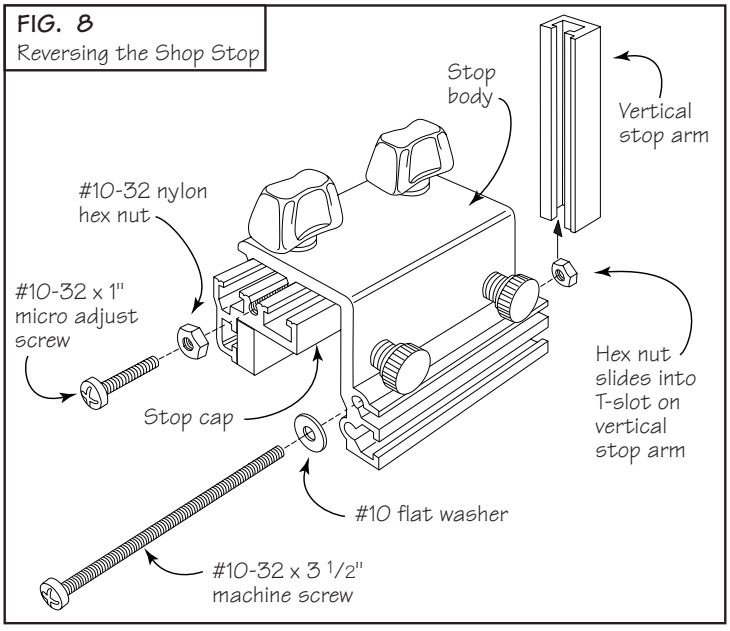

FIG. 9

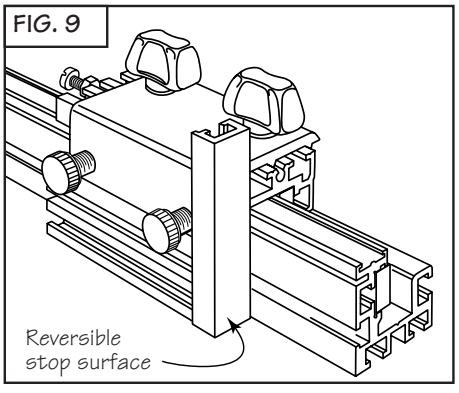

FIG. 10

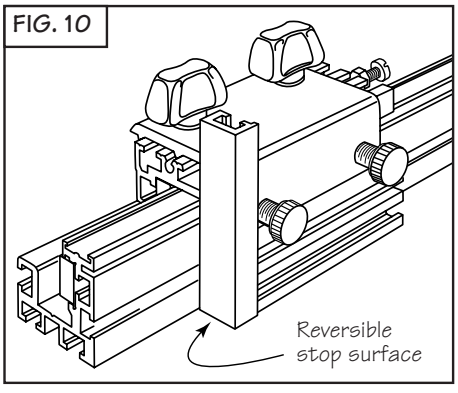

Note: *Whenever reversing the Shop Stop, always make sure the stop surface selected (vertical arm or horizontal rod) protrudes at least ⅛" in front of the end of the gold stop cap. Otherwise taller workpieces will be stopped by the gold stop cap rather than the selected stop surface.*

Customizing your Shop Stop:

By removing both the vertical stop arm and the horizontal stop rod, user-made wooden stops can be attached to the front face of the stop. You'll find this feature useful when you want the stop surface to match an odd-shaped wood profile or a mitered board end. Fig. 11 describes just one example of a user-made stop. By gluing two pieces of wood together, an "L" shape can be produced which can be cut to match the desired profile and then screwed into the T-slot. The "L" feature on the block can be glued on to protrude up, down, in or out as desired.

Note: *Should you ever remove the micro adjust screw, make sure to tighten the nylon nut against the aluminum when replacing it. The nylon nut keeps the micro adjust screw from vibrating loose during cutting operations.*

FIG. 11
Customizing your stop

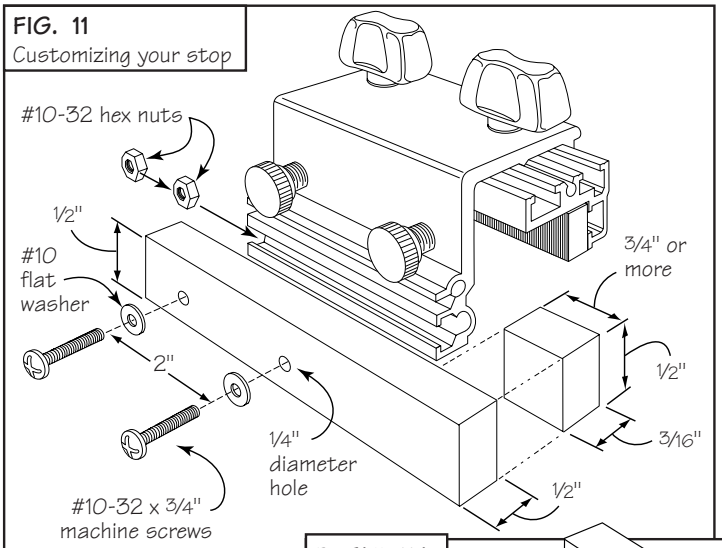

DETAIL 11A

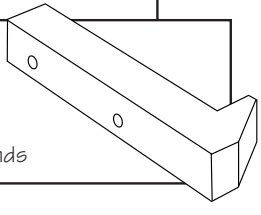

Example of user-made wooden stop surface designed to position boards with mitered ends

Calibrating the Shop Stop for your Workstation:

In order for your INCRA Shop Stop to accurately locate your workpiece for a cut, you must first "zero" your Shop Stop to the bit or blade and position the sliding scale on your fence. Zeroing is often just as simple as clamping your Shop Stop to the fence with the stop surface just touching the bit or blade. You want the stop surface to be zero distance from the cutter, so a little micro adjusting might be required. Once this zero position is found, slide the scale on your INCRA Fence to read "0" directly under one end of the gold stop cap. This approach, however, won't handle every situation in the shop. Sometimes, as in the case of a router or drill bit, it becomes necessary to use an indirect approach to setting the initial scale position. For zeroing at the router table, drill press and crosscut stations, a step-by-step approach ensures an easy and accurate setup. See Figs. 12 thru 15 for the steps.

Note: *The vertical stop arm is the stop surface illustrated in all of the examples to follow, but don't rule out the use of the horizontal rod for your stop surface.*

Once the Shop Stop is zeroed to the router bit as shown in Fig. 12, you now have the choice of setting the sliding scale on your INCRA Fence to one of three initial positions. See Fig. 13.

Zeroing at the Router Table:

For most applications at the router table you will be using your Shop Stop on the outfeed fence to limit the length of a cut relative to the front end of a board. Follow the steps in Fig. 12 below.

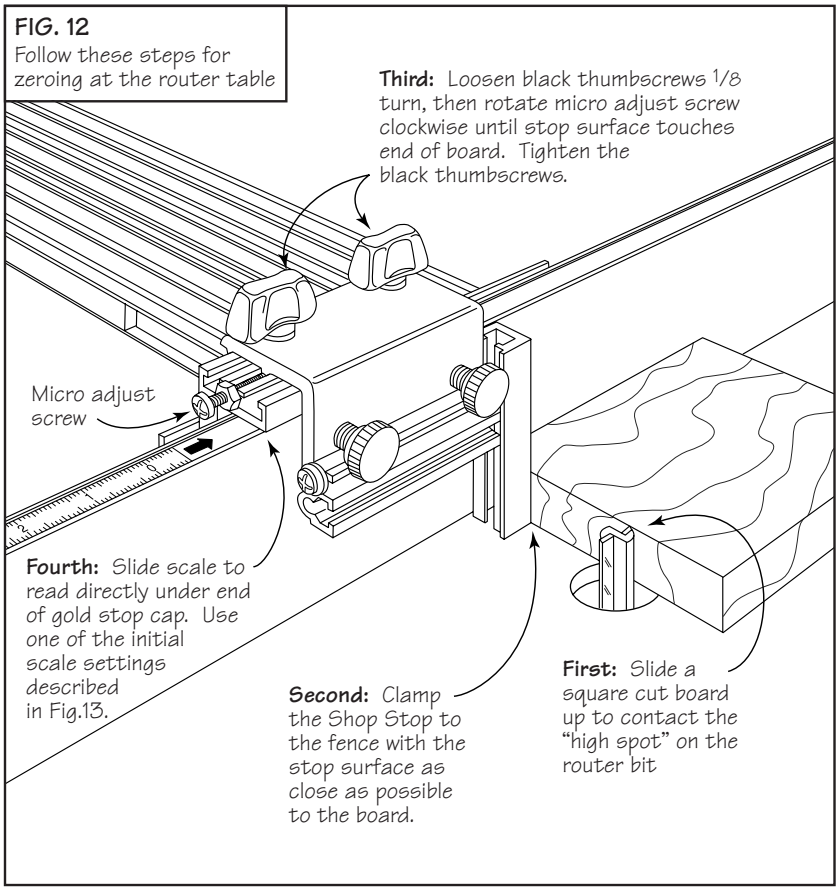

FIG. 12
Follow these steps for zeroing at the router table

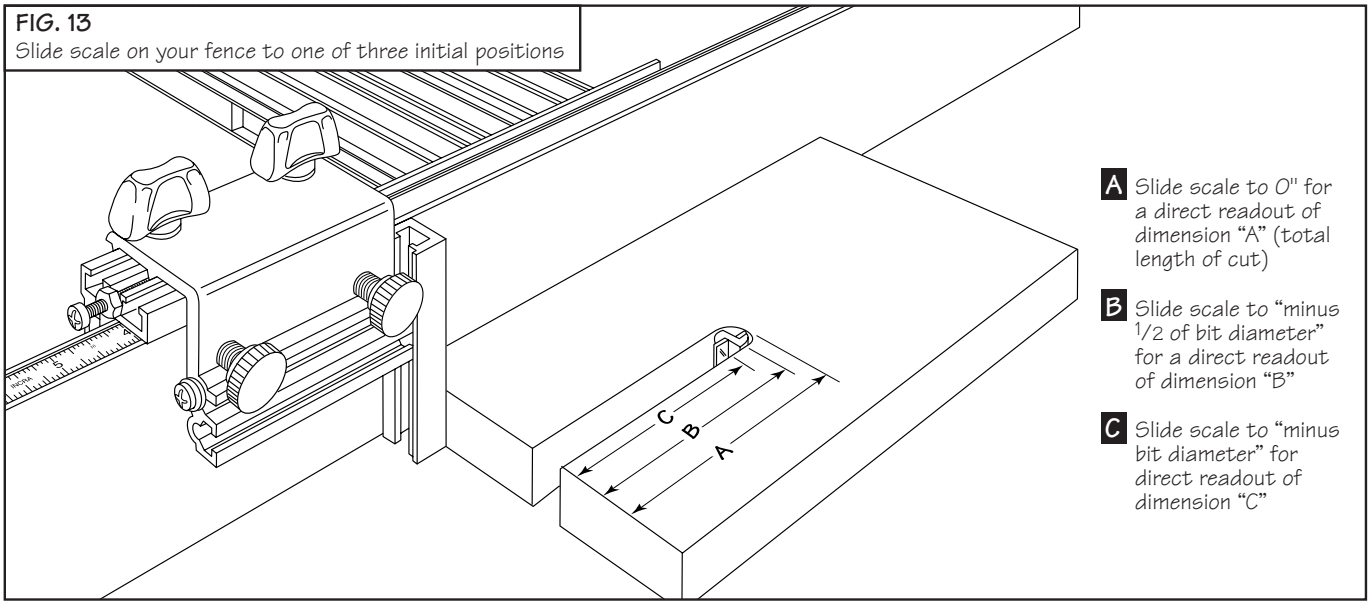

FIG. 13
Slide scale on your fence to one of three initial positions

Zeroing at the Drill Press:

Zeroing at the drill press is really the same as zeroing at a router table. Stop locations at a drill press, however, are almost always located relative to the center of the bit, not the edge of the bit. Because of this, and the fact that drill bits are available in so many different sizes (decimal, 64ths, metric, letter and number), it is a good idea to use a specific "set up" rod or drill bit each time you zero your Shop Stop. The "set up" rod should have a diameter that is some multiple of 1/16". In the steps following we'll use a 1/4" rod for the set up.

1 Set the distance between your INCRA Fence and the center of the drill bit as required by your project. An INCRA JIG at your drill press makes this step really easy. Otherwise use a bradpoint drill bit and a ruler, or mark drill center lines on your workpiece and use these lines to initially position your INCRA Fence.

2 Install a short length of 1/4" steel rod in your drill press (a 1/4" twist drill bit will also work well). Place a square cut piece of scrap stock against the fence with the end of the board against the 1/4" rod.

3 Lock the INCRA Shop Stop to the fence with the selected stop surface (vertical arm or horizontal rod) as close as possible to the end of the board.

4 Loosen the two black thumbscrews about 1/8 turn, then rotate the micro adjust screw clockwise until the stop surface touches the end of the board. Tighten the black thumbscrews.

5 Slide the scale on your fence to read minus 1/2 of the set up rod diameter. In this case, since we used a 1/4" diameter set up rod, we'll slide the scale to read negative 1/8" directly under the end of the gold stop cap. (The scale can be set to read under either end of the gold stop cap.) Use the end that gives the best visibility.

When set to this initial position, the scale reading at any subsequent Shop Stop location will give you a direct readout of the distance from the end of the workpiece to the center of the hole.

TIP

If you're not using the horizontal rod on your Shop Stop as the stop surface, it can be used as your drill press set up rod.

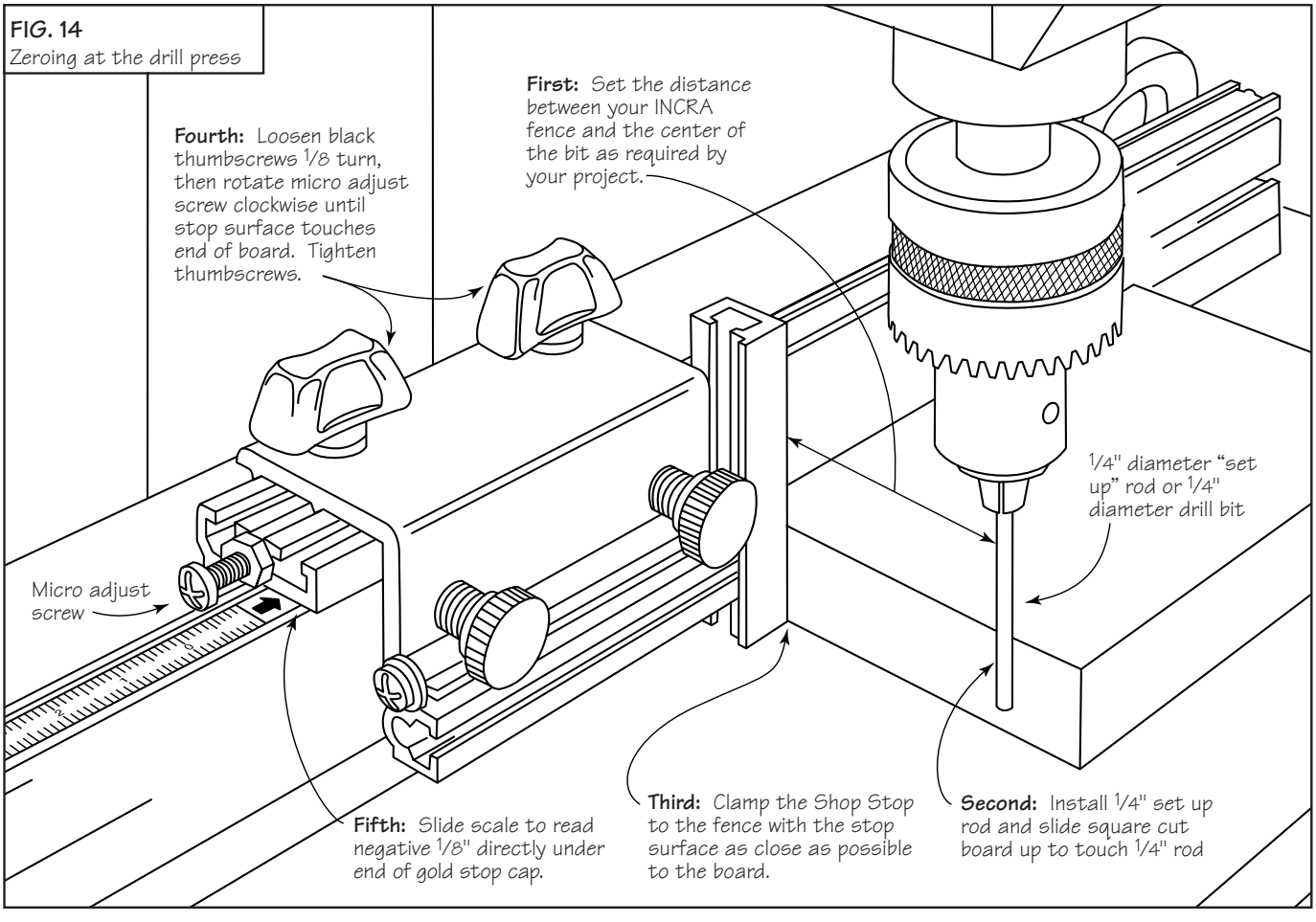

FIG. 14
Zeroing at the drill press

Zeroing at Crosscut Stations:

There are several stations in the shop where crosscutting operations can take place – the radial arm saw, chop saw, sliding miter saw, and the table saw. The radial arm saw, chop saw and sliding miter saw are all similar in that the workpiece is held against a stationary fence as the blade is moved through the cut. At the table saw, crosscutting is accomplished with the help of a miter gauge or by using a crosscut box. In these approaches the workpiece is held against a fence that is moved, guided by the miter slots in the table saw, over a stationary blade. In any case, accessorizing these tools with an INCRA Track and INCRA Shop Stop makes accurate crosscutting effortless.

Zeroing at these tools is easy. Here's how:

With the saw unplugged, raise the blade about 1" and clamp the Shop Stop to your INCRA fence with the stop surface as close as possible to the blade.

1 Position fence far enough away from the blade to comfortably clear the blade at ALL cutting angles.

> **Note:** *Depending on the distance of the end of the fence to the blade (as determined in Step 1 above), one of the white thumb-screws may overhang the end of the fence when zeroing. Just be sure that during any cutting operation, the Shop Stop is positioned sufficiently far enough away from the blade for safe finger clearance, and that both white thumbscrews are engaged against the fence surface.*

2 Loosen the black thumbscrews about 1/8 turn then rotate the micro adjust screw clockwise until the stop surface touches the teeth on your saw blade. Tighten the thumbscrews.

3 Slide the scale on your fence to read 0" directly under the end of the gold stop cap. (Use the end farthest from the saw blade)

4 Now at each subsequent setting of your Shop Stop, the scale will give a direct readout of the distance between the stop surface and the saw blade.

FIG. 15
Typical crosscut application

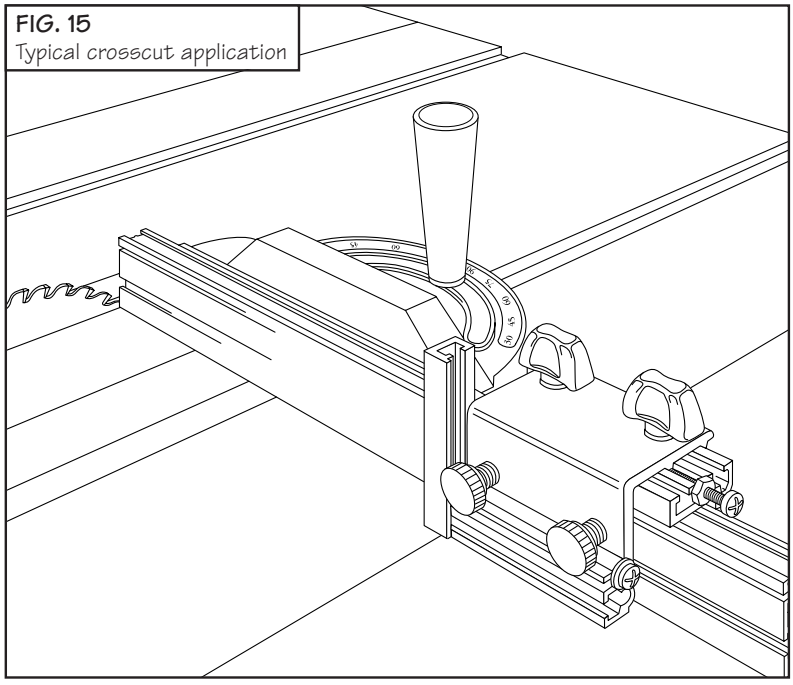

> **CAUTION:** Always unplug the motor before zeroing your Shop Stop to any power tool.

FIG. 16
Zeroing at the tablesaw

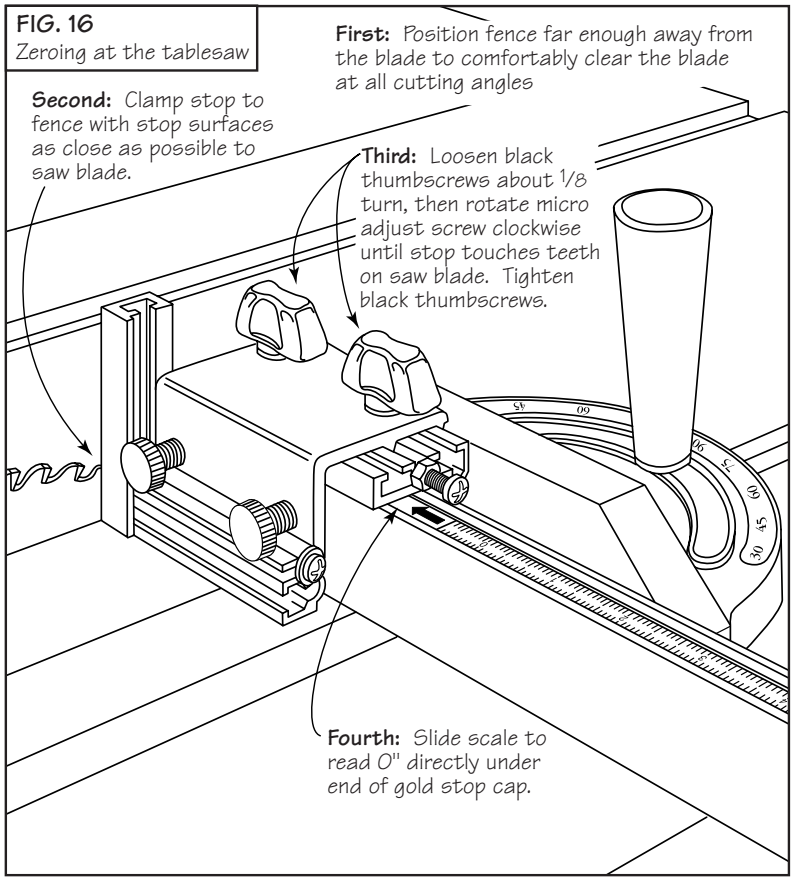

PARTS AND OPTIONAL ACCESSORIES

Part #	Part Description	Price
SHOPSTOP	**INCRA Shop Stop**	$ 32.95
	Add a second Shop Stop to your INCRA Fence or INCRA Track for mortising and other applications	
TRACK18	**18" Track Section**	$ 27.95
TRACK36	**36" Track Section**	$ 42.95
TRACK52	**52" Track Section**	$ 52.95
	Add one or more individual INCRA Track Sections for placing the ShopStop on both sides of the cutter, or extending the stopping range. Track sections include incremental racks, sliding scales, and complete mounting hardware.	
TRACKSYS18	**18" Track *plus* Shop Stop**	$ 52.95
TRACKSYS36	**36" Track *plus* Shop Stop**	$ 72.95
TRACKSYS52	**52" Track *plus* Shop Stop**	$ 82.95
	Buy the complete INCRA Track System and save. Includes specified length of INCRA Track section, INCRA Shop Stop, incremental racks, sliding scales, and complete mounting hardware.	

PRODUCT INFORMATION

For a product information update on the complete INCRA line of tools, please see your nearest dealer. If you are unable to locate a store nearby, or if you have trouble finding a particular product, we will honor your order directly.

For a product information brochure, call, write or fax to:
Taylor Design Group, Inc.
P.O. Box 810262, Dallas, TX 75381
Tel: (972) 418-4811 Fax: (972) 243-4277
Web Site: www.incra.com

WARRANTY

Taylor Design Group, Inc. warrants this product for one year from date of purchase. We will repair any defects due to faulty material or workmanship, or at our option, replace the product free of charge. Please return the failing component only, postage prepaid, along with a description of the problem to the address below. This warranty does not apply to parts which have been subjected to improper use, alteration, or abuse.

LIFETIME WARRANTY ON POSITIONING RACKS

If an INCRA positioning rack in this tool becomes damaged for ANY reason, Taylor Design Group will replace it free of charge for as long as you own your tool. Return the damaged rack, transportation prepaid, and allow 1 to 2 weeks for delivery.

NOTE:
Replacements cannot be sent unless damaged racks have been received by Taylor Design Group.

Made in America by:
Taylor Design Group, Inc. ▪ P.O. Box 810262 ▪ Dallas, Texas 75381 ▪ Web Site: www.incra.com 0199

Printed in the U.S.A.
© 1999, Taylor Design Group, Inc. INCRA is a registered trademark of Taylor Design Group, Inc.